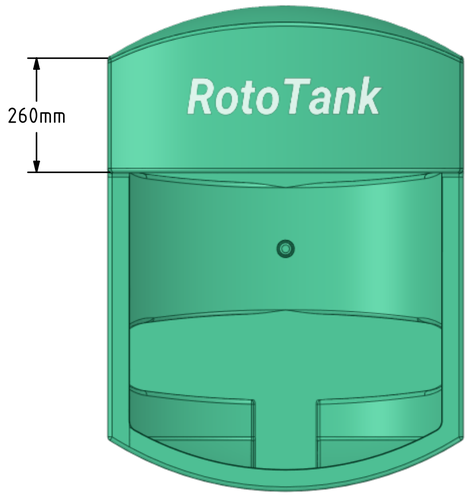

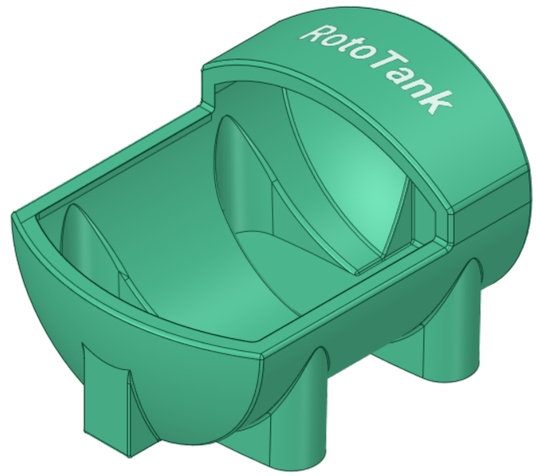

SCALE 1:10

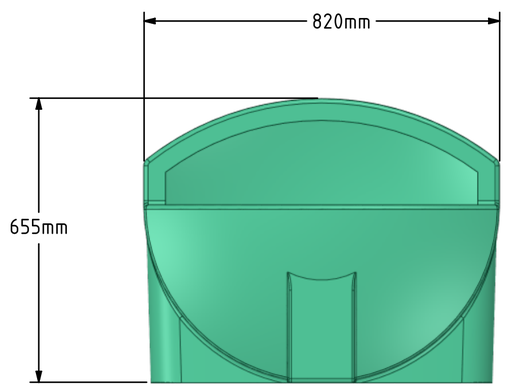

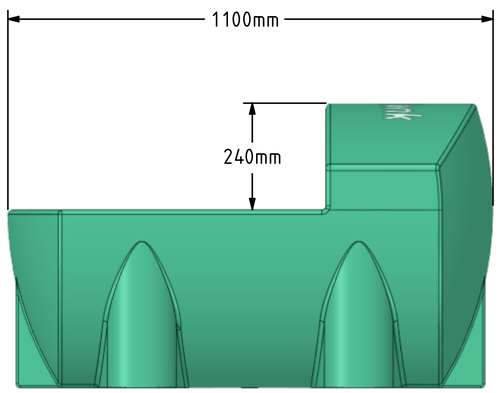

SCALE 1:10

	Date	Name
DRAWN		
CHECKED		
ENG. APPR.		
MFG APPR.		

TITLE: WATER TANK TROUGHS

RotoTank™
Manufacturers of Water, Chemical, Transport, Septic tanks and Silos

PROPRIETARY AND CONFIDENTIAL
THE INFORMATION CONTAINED IN THIS DRAWING IS THE SOLE PROPERTY OF ROTOTANK. ANY REPRODUCTION IN PART OR AS A WHOLE WITHOUT THE WRITTEN PERMISSION OF ROTOTANK IS PROHIBITED.

DWG No.
WT250H

SHEET 1

NOTES:
SIZES INDICATED IN THIS DRAWING ARE SUBJECT TO MATERIAL SHRINK VARIATIONS AND MAY VARY WITH APPROXIMATELY 3%.